# 5.0V Surface Mount Crystal Clock Oscillator HSM6

CONNOR WINFIELD

XO

2111 Comprehensive Drive
Aurora, Illinois 60505
Phone: 630-851-4722
Fax: 630-851-5040
www.conwin.com
US Headquarters:
630-851-4722
European Headquarters:
+353-61-472221

The Connor-Winfield models HSM61, HSM62, and HSM63 are 7.5mm x 5mm, 5.0V HCMOS, Surface Mount, Fixed Frequency Crystal Oscillators (XO) designed for use in all applications requiring precision clocks. The RoHS compliant surface mount package is designed for high-density mounting and is optimum for mass production

## Features:

- RoHS Compliant
- 1.0 to 80 MHz
- 5.0V Operation
- Tri-State Enable/Disable Function
- Overall Frequency Tolerance:
  - HSM61 ± 25 ppm, HSM62 ± 50 ppm, HSM63 ± 100 ppm
- Temperature Range: -40 to 85°C
- Ceramic Surface Mount Package
- Tape and Reel Packaging

## Absolute Maximum Ratings

| Parameter | Minimum | Nominal | Maximum | Units | Notes |
|---|---|---|---|---|---|
| Storage Temperature | -55 | - | 125 | °C | |
| Supply Voltage (Vcc) | -0.5 | - | 7.0 | Vdc | |

## Operating Specifications

| Parameter | Minimum | Nominal | Maximum | Units | Notes |
|---|---|---|---|---|---|
| Frequency Range (Fo) | 1.0 | - | 80 | MHz | |
| Frequency Tolerance | | - | | ppm | 1 |
| HSM61 | -25 | | 25 | | |
| HSM62 | -50 | | 50 | | |
| HSM63 | -100 | | 100 | | |
| Operating Temp Range | -40 | - | 85 | °C | |
| Supply Voltage (Vdd) | 4.5 | 5.0 | 5.5 | Vdc | |
| Supply Current (Icc) | - | - | | mA | |
| 1.8 to 31.999 MHz | | | 27 | | |
| 32.0 to 49.999 MHz | | | 45 | | |
| 50 to 80.0 MHz | | | 75 | | |

## Input Characteristics

| Parameter | Minimum | Nominal | Maximum | Units | Notes |
|---|---|---|---|---|---|
| Enable Voltage - (Vih) | 2.2 | - | - | Vdc | 2 |
| Disable Voltage - (Vil) | - | - | 0.8 | Vdc | |
| Enable Time | - | - | 100 | nS | |
| Disable Time | - | - | 100 | nS | |

## HCMOS Output Characteristics

| Parameter | | Minimum | Nominal | Maximum | Units | Notes |
|---|---|---|---|---|---|---|
| Load | | - | - | 50 | pF | |
| Voltage | High (Voh) | 4.50 | - | - | Vdc | |
| | Low (Vol) | - | - | 0.55 | | |
| Current | High (Ioh) | -16 | - | - | mA | |
| | Low (Iol) | - | - | 16 | | |
| Duty Cycle at 50% of Vcc | | 45 | 50 | 55 | % | |
| Rise / Fall Time 10% to 90% | | - | - | 5 | nS | |
| Start-Up Time | | - | - | 10 | mS | |
| Jitter | | - | - | 5 | pS RMS | |

RoHS COMPLIANT



**Notes:**

1. *Inclusive of calibration @ 25°C , frequency vs temperature stability, supply voltage change, load change, shock and vibration, 10 years aging.*
2. *Oscillator output is enabled with no connection on pad 1*

CONNOR WINFIELD

2111 Comprehensive Drive
Aurora, Illinois 60505
Phone: 630-851-4722
Fax: 630-851-5040
www.conwin.com

## Package Characteristics

| | |
|---|---|
| Package | Hermetically sealed ceramic package and metal cover |

## Environmental Characteristics

| | |
|---|---|
| Temperature Cycle | The specimen shall meet electrical characteristics after tested 5 cycles of -55°C / 30 minutes and +125°C / 30 minutes |
| Hermetical | No bubbles appear in Flourinert (FC-43) at 125°C ±5°C for 5 minutes |
| Solvent Resistance | Marking will withstand immersion in Isopropyl Alcohol or Trichloroethylene |

## Soldering

| | |
|---|---|
| General Conditions | 260°C max x 10 sec max x 2 times max or 230°C max x 180 sec max x 1 time |
| Typical Operation Data | (Vapor phase reflow) 20 to 100 sec up to 215°C, 50 sec at 215°C, then down to room temperature per 1 to 5°C / sec |

## Mechanical Characteristics

| | |
|---|---|
| Mechanical Shock | MIL STD 883 Method 2002 |
| Vibration | The specimen shall meet electrical characteristics after tested by the following conditions: 10-55Hz 1.5mm Amplitude, 55-2000 Hz 20 G's, 2 hours for each plane |
| Thermal Shock | After applied Thermal Shock of 260°C max x 10 sec max x 2 times, or 230°C max x 180 sec max, the specimen shall meet electrical characteristics |
| Solderability | (EIAJ-RCX-0102.101 Condition 1a) 1) Flux: MIL-F-14256 (WW Rosin=25%, Isopropyl Alcohol = 75%) 2) Solder: QQ-S-571 (Sn = 63%, Pb = 37%) 3) Solder bath temperature: 235°C ±5°C 4) Depth of immersion: Up to electrical terminal 5) Immersing time: Within 2 sec ±0.5 sec into solder bath |

*After performing the above procedures, a newly soldered coverage shall be greater than 90%*

## Ordering Information

| HSM | 6 | 1 | | 044.736M |
|---|---|---|---|---|
| Type: Clock 7.5x5.0mm Package | Temperature Range: 6 = -40 to 85˚C | Frequency Tolerance: 1 = ± 25 ppm 2 = ± 50 ppm 3 = ± 100 ppm | Supply Voltage: Omit = 5.0 Vdc | Output Frequency: Frequency Format -xxx.xM Minimum * -xxx.xxxxxxM Maximum* *Amount of numbers after the decimal point. M = MHz |

Example: To Order an HSM61 with an output frequency of:
4 MHz = HSM61-004.0M
44.736 MHz = HSM61-044.736M
125 MHz = HSM61-125.0M

## Tape and Reel Dimensions

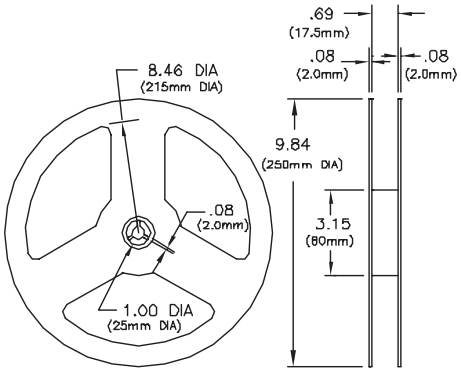


Meets EIA-481A and EIAJ-1009B
2,000 PCS/Reel

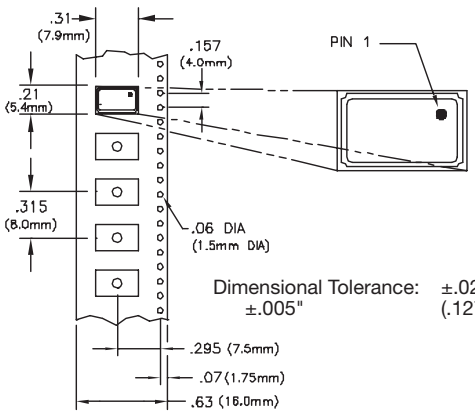


Dimensional Tolerance: ±.02" (.508mm)
±.005" (.127mm)

## Suggested Pad Layout

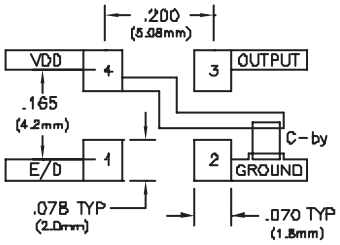


Bypass capacitor, C-by, should be ceramic capacitor ≥ .01 uf

## Test Circuit

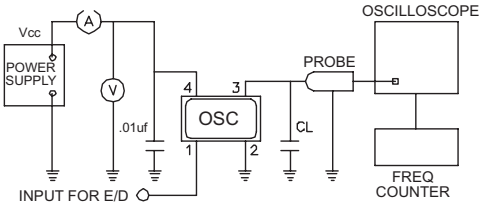


## Output Waveform

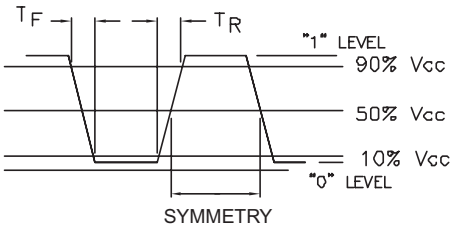


## RoHS Solder Profile

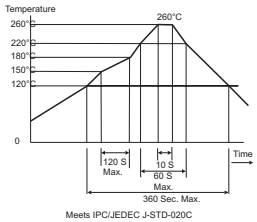


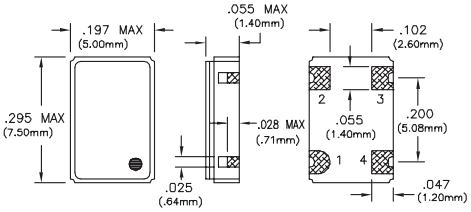


**Pin Connections**

1: Enable/Disable
2: Ground
3: Output
4: Vcc

| | |
|---|---|
| Bulletin | **SM036** |
| Page | **2 of 2** |
| Revision | **14** |
| Date | **25 March 2010** |